Foundations of Biology - II

Pedigree analysis

Acknowledgement: Taken from various sources.

INDRAPRASTHA INSTITUTE *of*
INFORMATION TECHNOLOGY
DELHI

Why construct pedigree trees?

- Although principles of heredity are the same in humans and in other organisms, the study of human genetic characteristics presents some major obstacles.
- **First,** controlled matings are not possible matings between humans are usually determined by romance, family expectations, or—occasionally—accident rather than by the requirements of a geneticist.
- **Second** obstacle is that humans have a long generation time. This long generation time means that, even if geneticists could control human crosses, they would have to wait for a long time just to observe the F2 progeny.
- **Finally,** human family size is generally small. Observation of even the simple genetic ratios requires substantial number of progenies.
- Although these special constraints make genetic studies of humans more complex, understanding human heredity is tremendously important. Pedigree construction and analysis is one way of overcoming these obstacles.

What is a pedigree?

- In summary, although the principles of heredity are the same in humans and in other organisms, the study of human inheritance is constrained by (a) the inability to control genetic crosses, the (b) long generation time, and the (c) small number of offspring.
- An important technique used by geneticists to study human inheritance is the analysis of pedigrees.
- **A pedigree is a pictorial representation of a family history, essentially a family tree that outlines the inheritance of one or more characteristics.**
- When a particular characteristic or disease is observed in a person, a geneticist often studies the family of this affected person by drawing a pedigree.

Symbols to represent pedigree

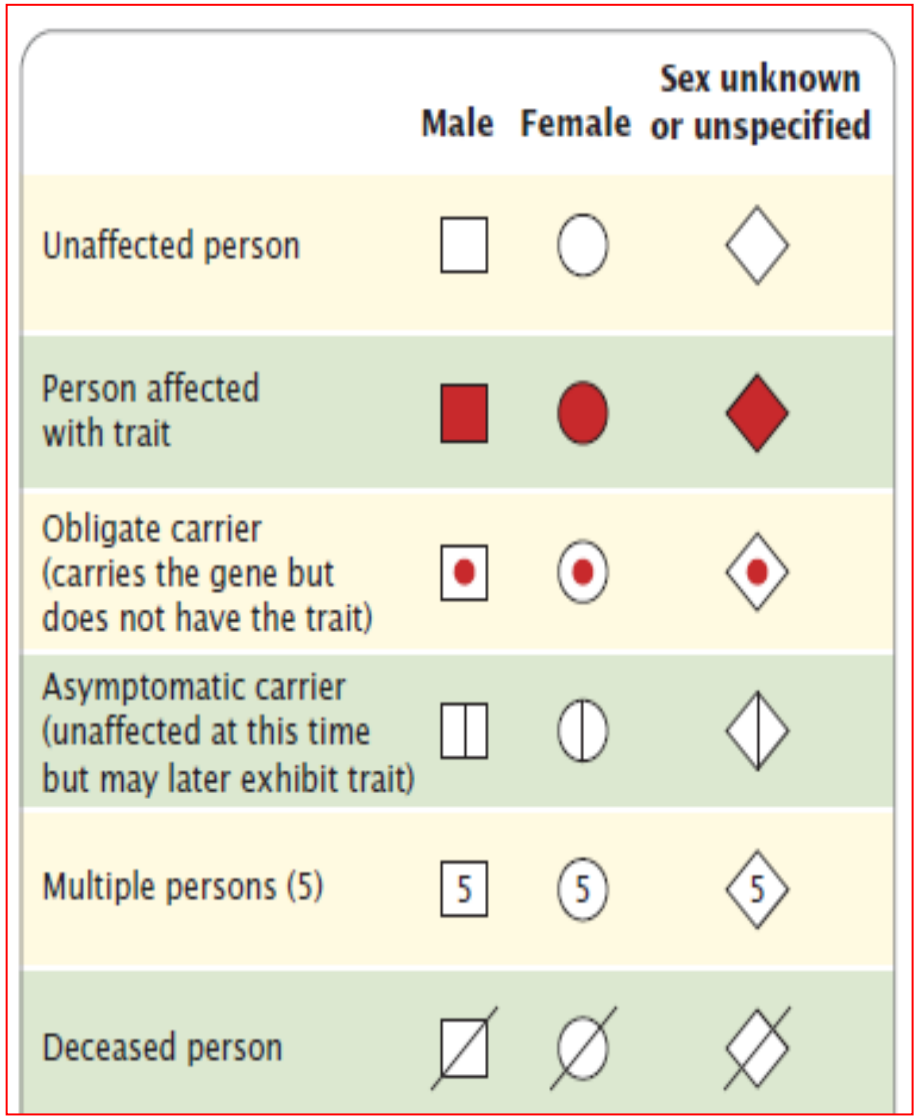

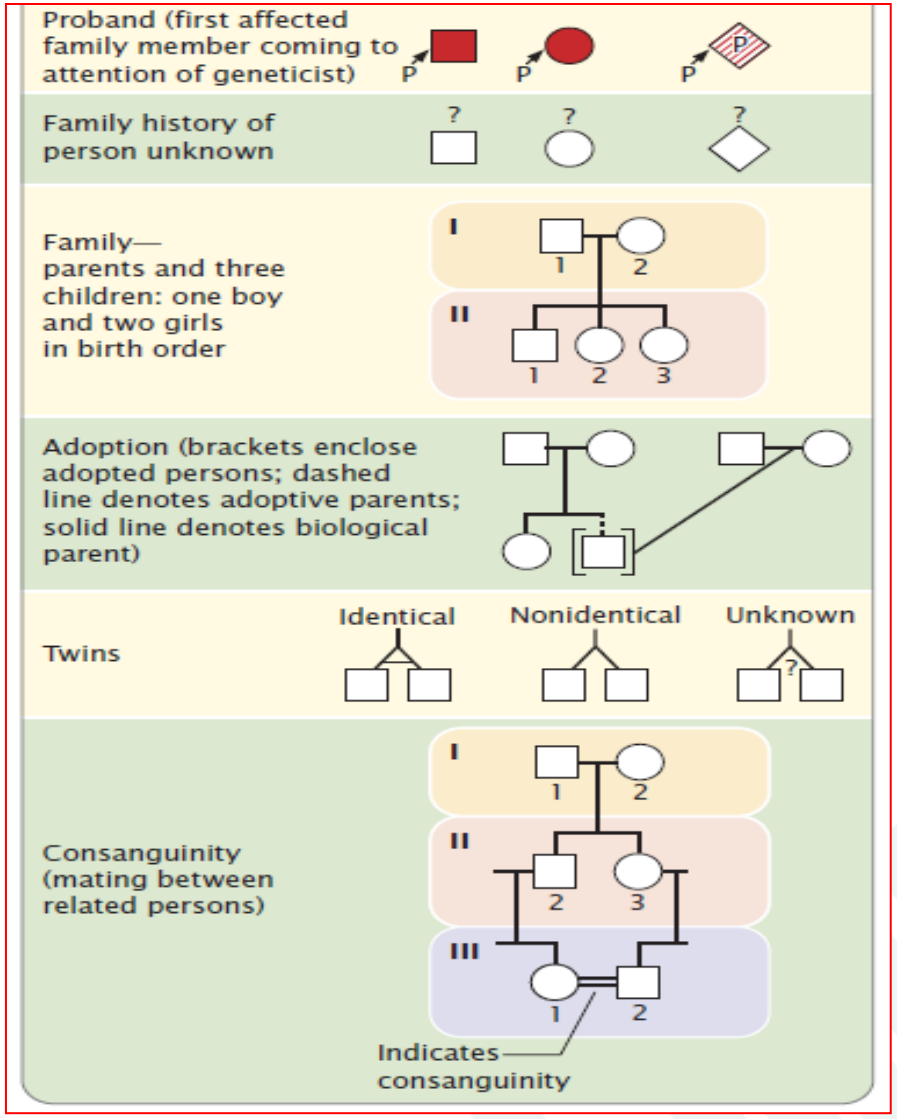

Problems

- Q1. Denote by symbol for a man with cystic fibrosis and a woman without it.

- Q2. A man marries and has two sons and a daughter. Wife dies and again he marries having one daughter by second marriage. Draw the pedigree that illustrates this scenario.

- Q3. Two people without a Tay-Sachs disease has twins (boy and a girl) who are healthy and a boy with a Tay-Sachs disease. Draw the pedigree.

Waardenburg Syndrome—Example of a pedigree

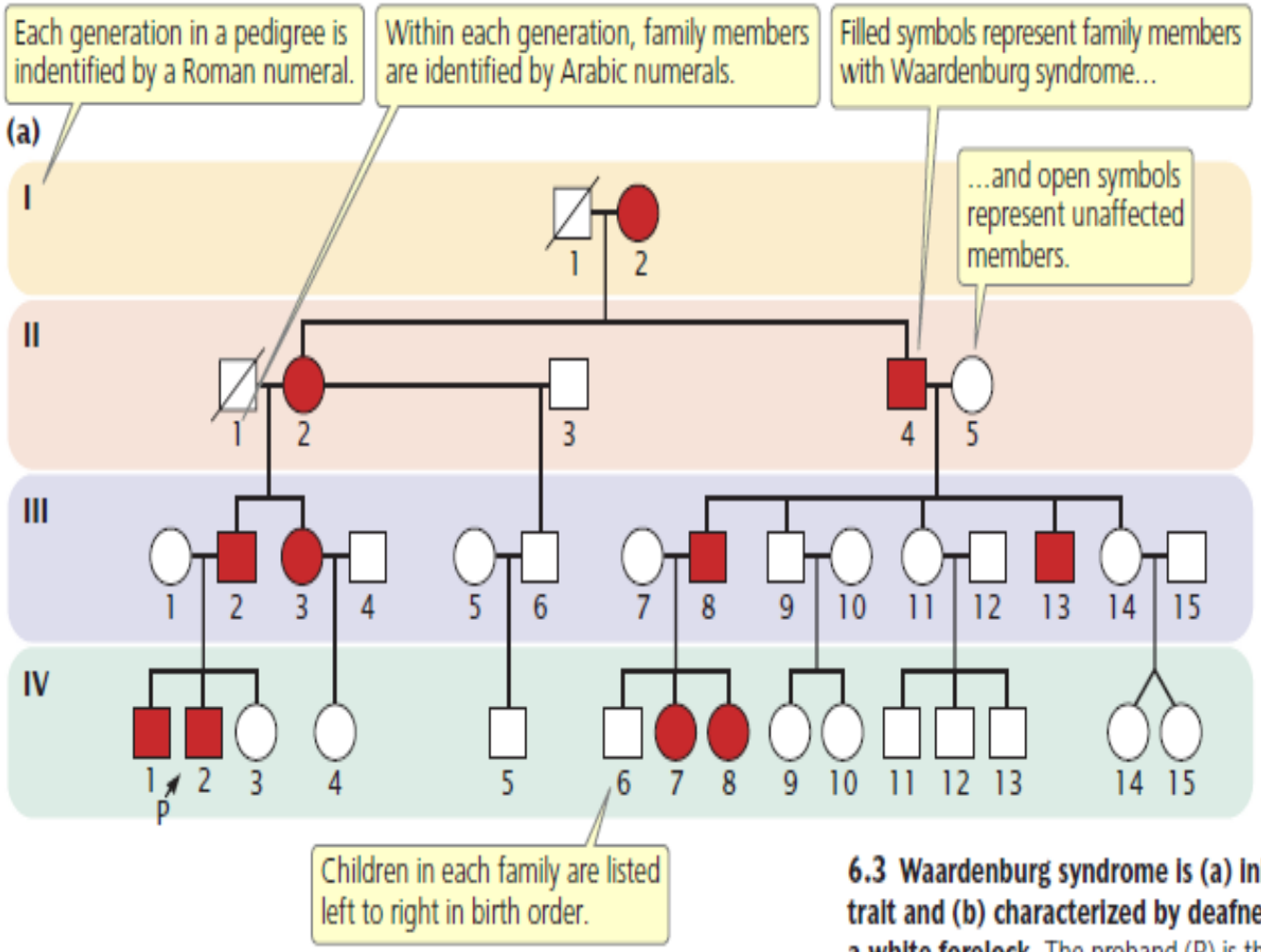

(b)

6.3 Waardenburg syndrome is (a) inherited as an autosomal dominant trait and (b) characterized by deafness, fair skin, visual problems, and a white forelock. The proband (P) is the person from whom this pedigree is initiated. [Photograph courtesy of Guy Rowland.]

Analysis of Pedigree analysis

- The limited number of offspring in most human families means that clear ***Mendelian ratios*** in a single pedigree **<u>are usually impossible to discern</u>**.
- Pedigree analysis requires a certain amount of genetic sleuthing, based on recognizing patterns associated with different modes of inheritance.
- For example, autosomal dominant traits should appear with equal frequency in both sexes and should not skip generations, provided that the trait is fully penetrant and not sex influenced.
- So what are the various possible traits?

Autosomal Recessive Traits

- Usually appears in both sexes with equal frequency.
- Tends to skip generations.
- Affected offspring are usually born to unaffected parents.
- When both parents are heterozygous, approximately one-fourth of the offspring will be affected.
- Appears more frequently among the children of consanguine marriages.

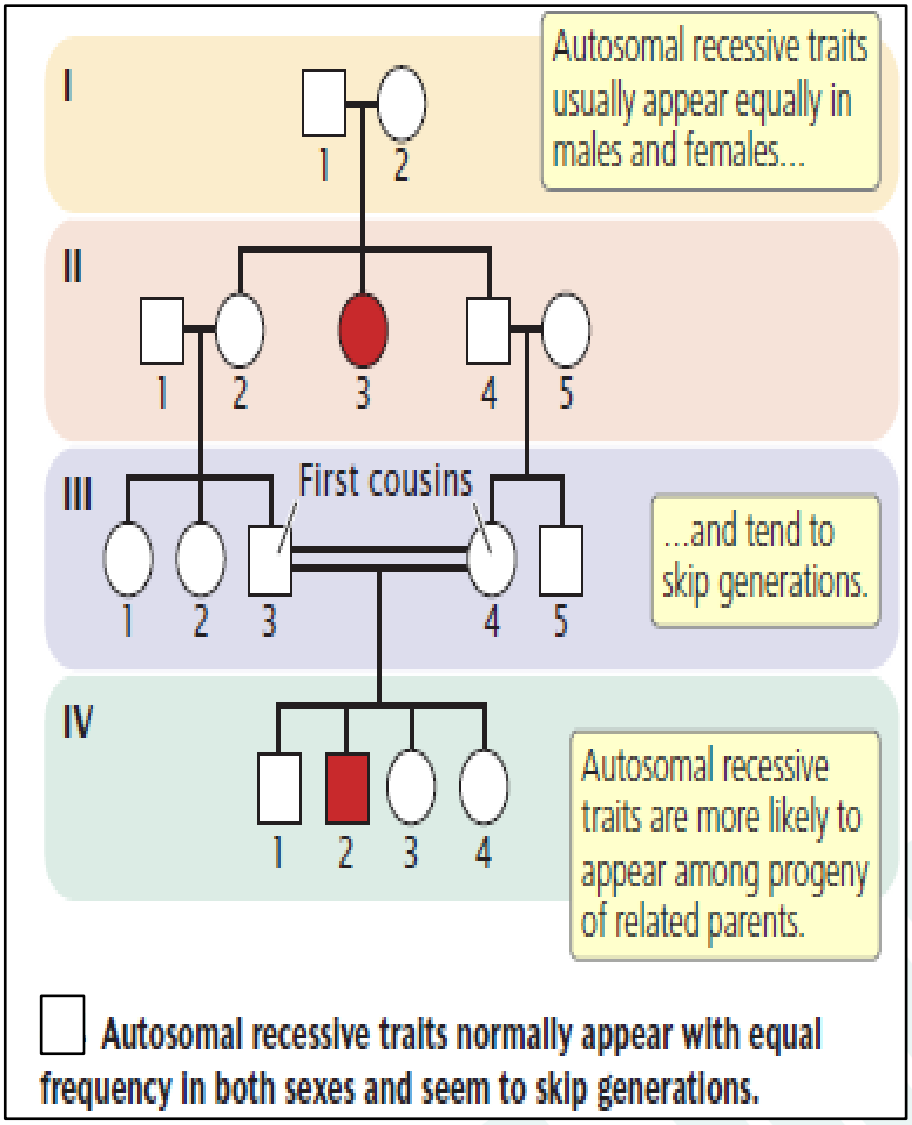

Problem:

Construct Pedigree for cystic fibrosis: Pedigree with only one gene.

- Consider Cystic fibrosis, an autosomal recessive genetic disease.
- Draw appropriate symbols for cystic fibrosis.
- Draw pedigree for a family in which two unaffected parents have a son with cystic fibrosis and an unaffected daughter.
- Identify their genotypes.

Solution

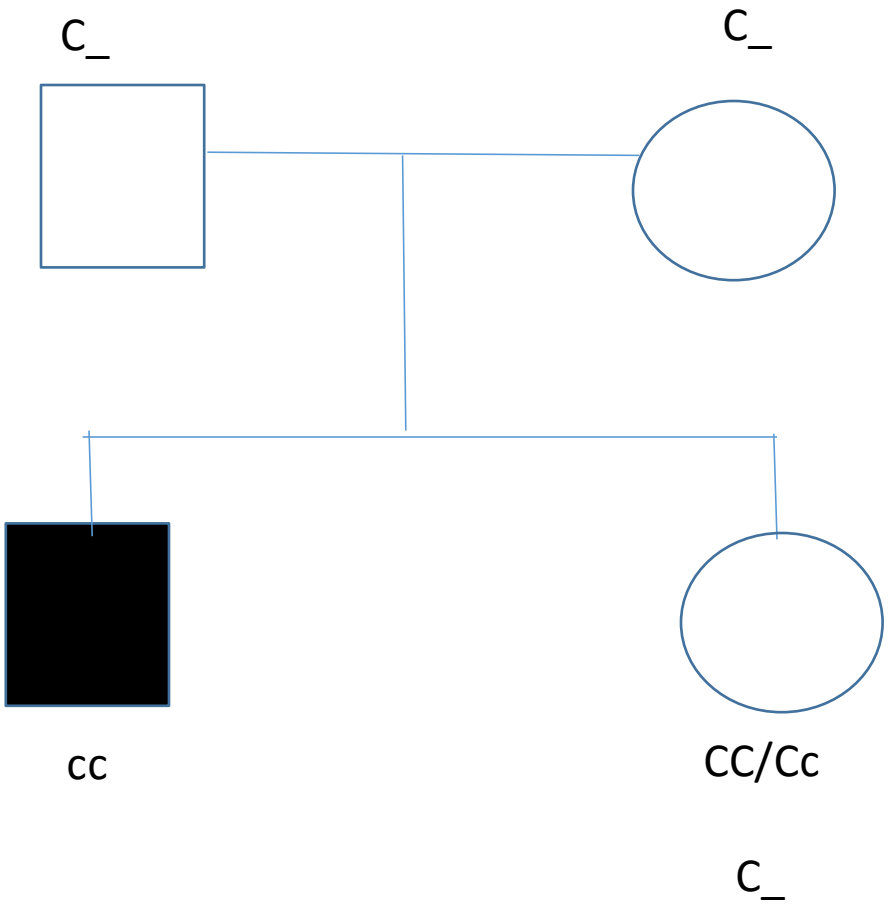

Parents are carriers

Son is having Cystic fibrosis

Daughter can be either carrier or not.

Autosomal Dominant Traits

- Usually appears in both sexes with equal frequency.
- Both sexes transmit the trait to their offspring.
- Does not skip generations.
- Affected offspring must have an affected parent unless they possess a new mutation.
- When one parent is affected (heterozygous) and the other parent is unaffected, approximately half of the offspring will be affected.
- Unaffected parents do not transmit the trait.

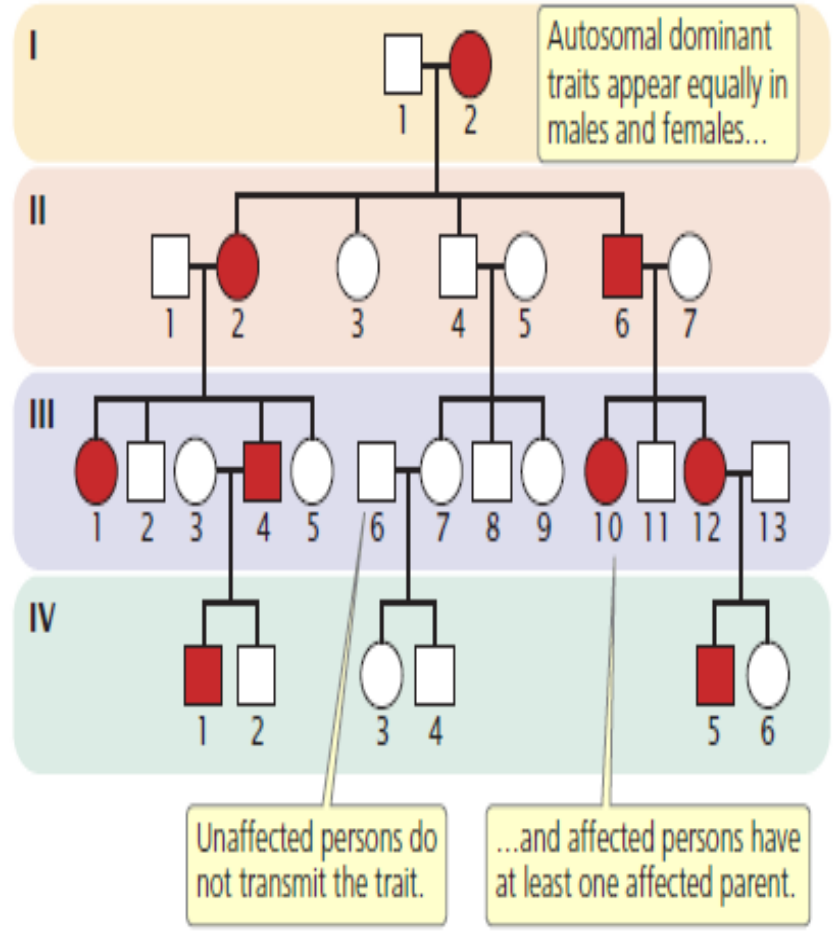

Autosomal dominant traits normally appear with equal frequency in both sexes and do not skip generations.

Problem: Marfan syndrome

- Consider Marfan syndrome, an autosomal dominant genetic disease.
- Draw appropriate symbols for this syndrome.
- Draw pedigree for a family in which two affected parents have unaffected son and an unaffected daughter.
- Identify their genotypes of unaffected son. Indicate any ambiguity or multiple possibilities.
- What is the chance that the next child in this family will have Marfan syndrome?

Solution

Its an autosomal dominant trait i.e., genotype can be either CC/C_

Other possiblities are

CC x CC
Cc x CC
CC x Cc

None of them produce Unaffected offspring.

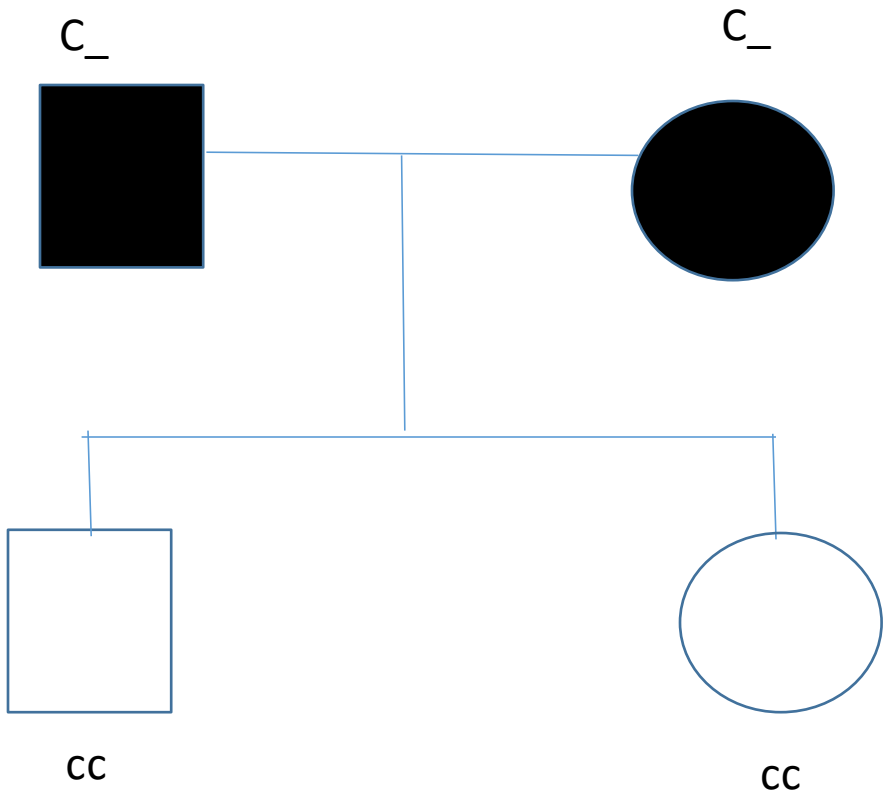

Parents are having Marfan syndrome

X-Linked Recessive Traits

- Usually more males than females are affected.
- Affected sons are usually born to unaffected mothers.
- Thus, the trait skips generations.
- Approximately half of a carrier (heterozygous) mother's
- Sons are affected.
- Never passed from father to son.
- All daughters of affected fathers are carriers

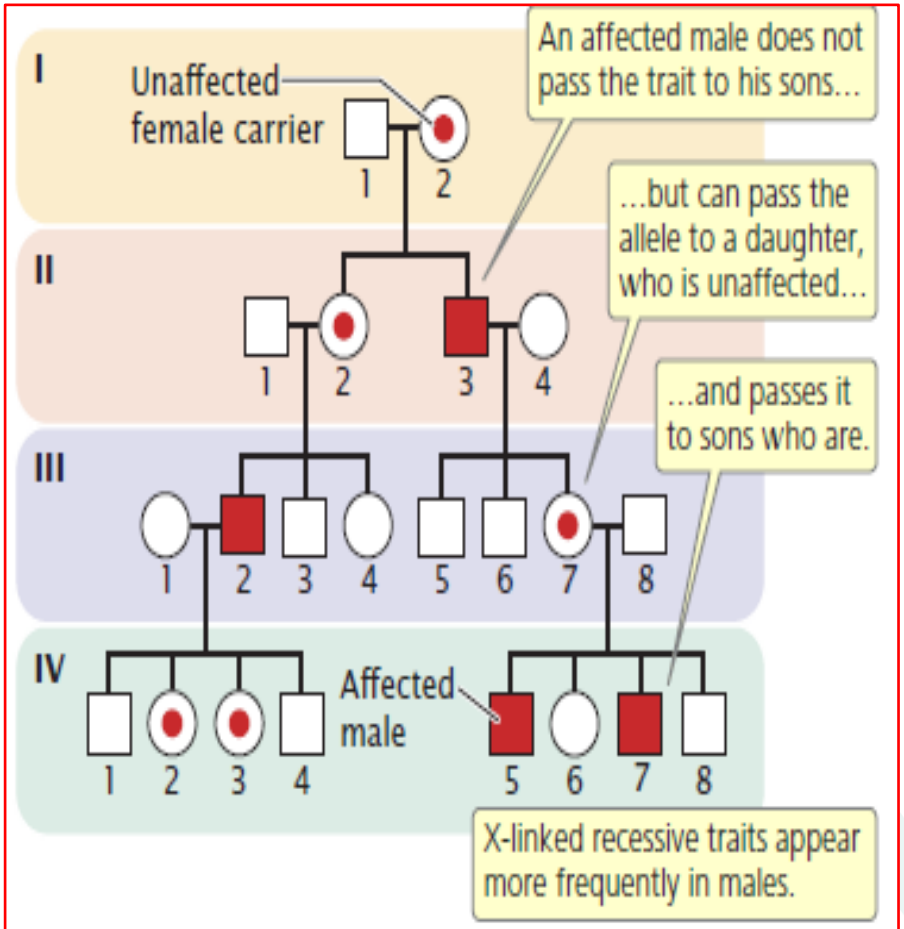

X-linked recessive traits appear more often in males than in females and are not passed from father to son.

X-Linked Dominant Traits

- Both males and females are usually affected; often more females than males are affected.
- Does not skip generations. Affected sons must have an affected mother; affected daughters must have either an affected mother or an affected father.
- Affected fathers will pass the trait on to all their daughters.
- Affected mothers (if heterozygous) will pass the trait onto half of their sons and half of their daughters

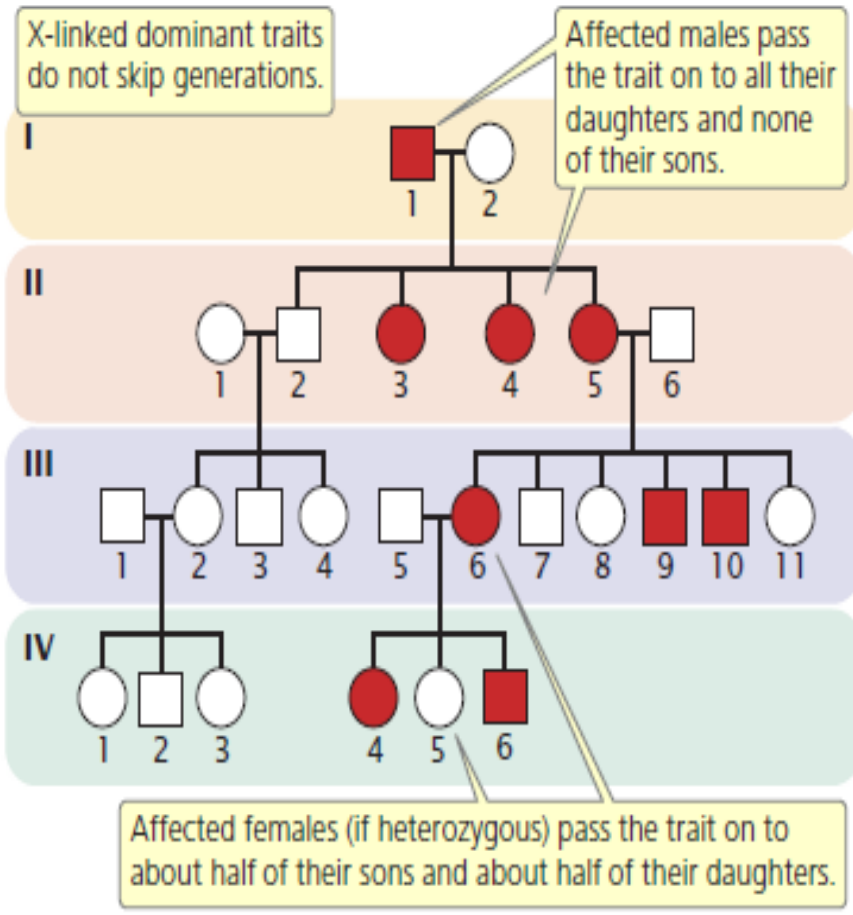

X-linked dominant traits affect both males and females. An affected male must have an affected mother.

Y-Linked Traits

- Only males are affected.
- Passed from father to all sons.
- Does not skip generations

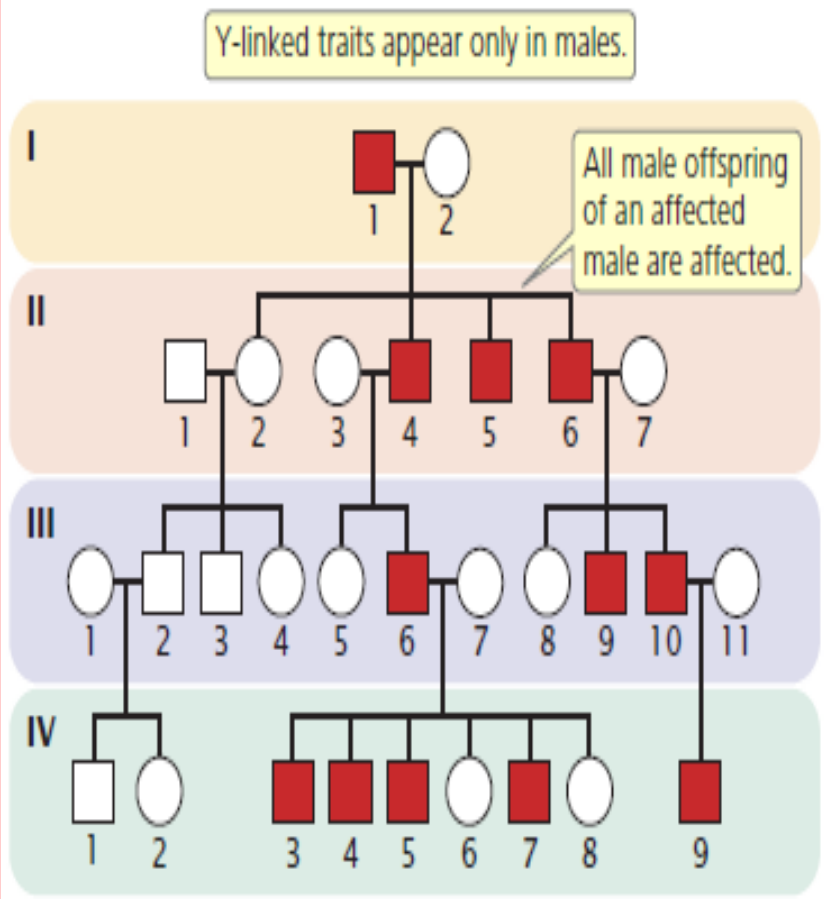

6.10 Y-linked traits appear only in males and are passed from a father to all his sons.

Types of Twins

- Twins are of two types:
- **Dizygotic (nonidentical) twins arise** when two separate eggs are fertilized by two different sperm, producing genetically distinct zygotes.
- **Monozygotic (identical) twins result when a single egg, fertilized by a single sperm,** splits early in development into two separate embryos.
- Because monozygotic twins result from a single egg and sperm (a single, "mono," zygote), they're genetically identical (except for rare somatic mutations), having 100% of their genes in common.
- Dizygotic twins**, on the other hand, have on average only 50% of their** genes in common, which is the same percentage that any pair of siblings has in common.

Concordance in Twins

- Comparisons of dizygotic and monozygotic twins can be used to assess the importance of genetic and environmental factors in producing differences in a characteristic.
- This assessment is often made by calculating the concordance for a trait. If both members of a twin pair have a trait, the twins are said to be *concordant;*
- *if only one member of the pair has the trait, the* twins are said to be *discordant.*
- **Concordance is the percentage** of twin pairs that are concordant for a trait. Because identical twins have 100% of their genes in common.
- Dizygotic twins have on average only 50% in common, genetically influenced traits should exhibit higher concordance in monozygotic twins.

Examples

Concordance of monozygotic and dizygotic twins for several traits

Trait	Concordance (%)	
	Monozygotic	Dizygotic
1. Heart attack (males)	39	26
2. Heart attack (females)	44	14
3. Bronchial asthma	47	24
4. Cancer (all sites)	12	15
5. Epilepsy	59	19
6. Rheumatoid arthritis	32	6
7. Multiple sclerosis	28	5

Sources: (1 and 2) B. Havald and M. Hauge, U.S. Public Health Service Publication 1103 (1963), pp. 61–67; (3, 4, and 5) B. Havald and M. Hauge, *Genetics and the Epidemiology of Chronic Diseases* (U.S. Department of Health, Education, and Welfare, 1965); (6) J. S. Lawrence, *Annals of Rheumatic Diseases* 26:357–379, 1970; (7) G. C. Ebers et al., *American Journal of Human Genetics* 36:495, 1984.